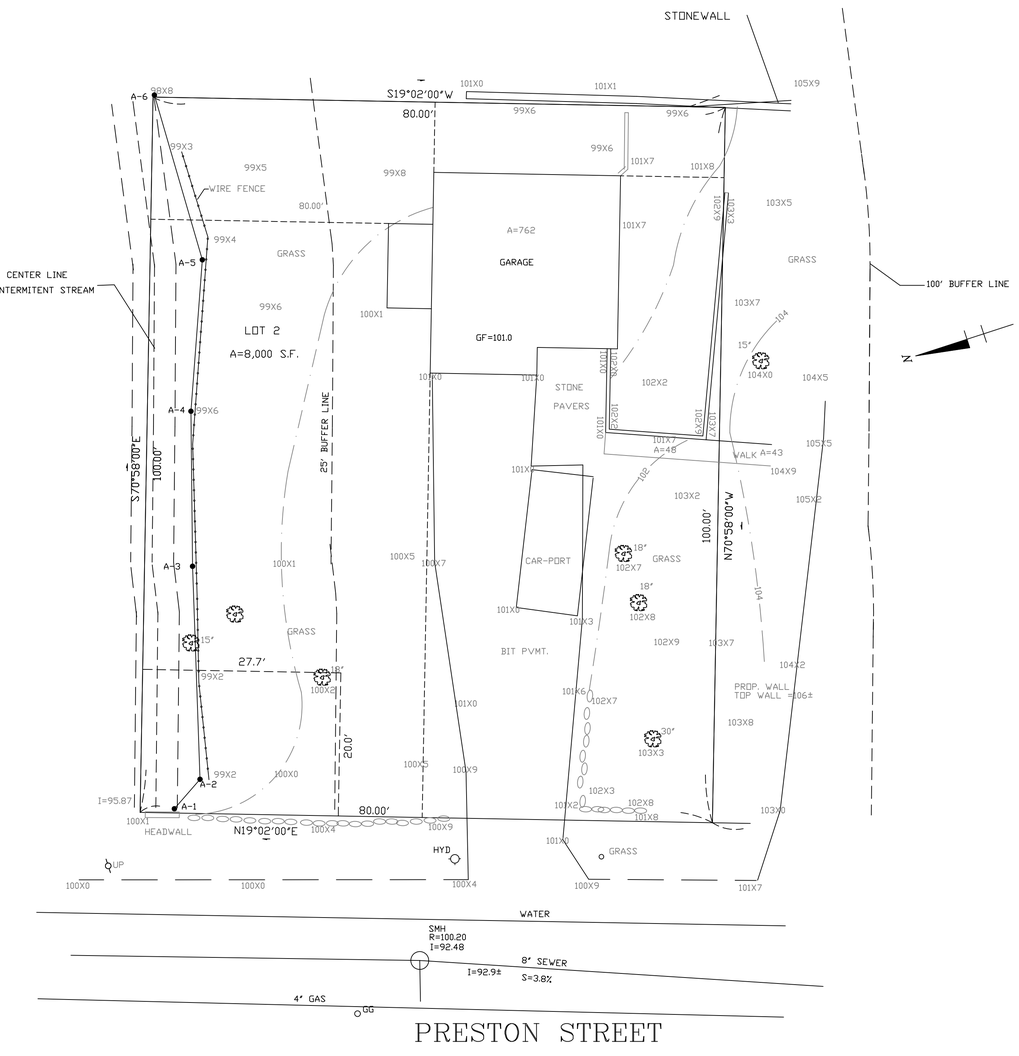


EXISTING

## IMPERVIOUS AREAS

| | EXIST. | PROPOSED |
|---|---|---|
| HOUSE | 0 | 2352 |
| GARAGE | 762 | 0 |
| DRIVEWAY/WALKWAYS | 1324 | 540 |
| TOTAL | 2086 | 2892 |

## LEGEND

| | |
|---|---|
| EXISTING CONTOUR | 100 |
| EXISTING SPOT GRADE | 100X3 |
| WETLANDS FLAGS | A-1 |
| HYDRANT | HYD |
| SEWER MANHOLE | |
| SEWER LINE | S |
| GAS GATE | GG |
| WATER LINE | W |
| UTILITY POLE | UP |
| WETLANDS LINE | |

## ZONING – GENERAL RESIDENCE

| | REQ'D. | EXIST. | PROP. |
|---|---|---|---|
| LOT AREA | 8000 S.F. | 8000 S.F. | 8000 S.F. |
| FRONTAGE | 80' | 80' | 80' |
| SETBACKS | | | |
| FRONT | 15 FT | 62' | 20.0 FT |
| SIDE (RT) | 10 FT | 14.5' | 10.3 FT |
| SIDE (LT) | 10 FT | 33' | 27.7 FT |
| REAR | 20 FT | 9.8' | 24.0 FT |
| LOT COV. | 35% | | 29.4% |
| OPEN SPACE | 30% | | 62.5% |
| HEIGHT | 35 FT | | 35 FT |
| STORY | 3 | 1 | 3 |
| FRONT YARD OPEN SPACE | 60% | | 77.5% |

DATUM–ASSUMED

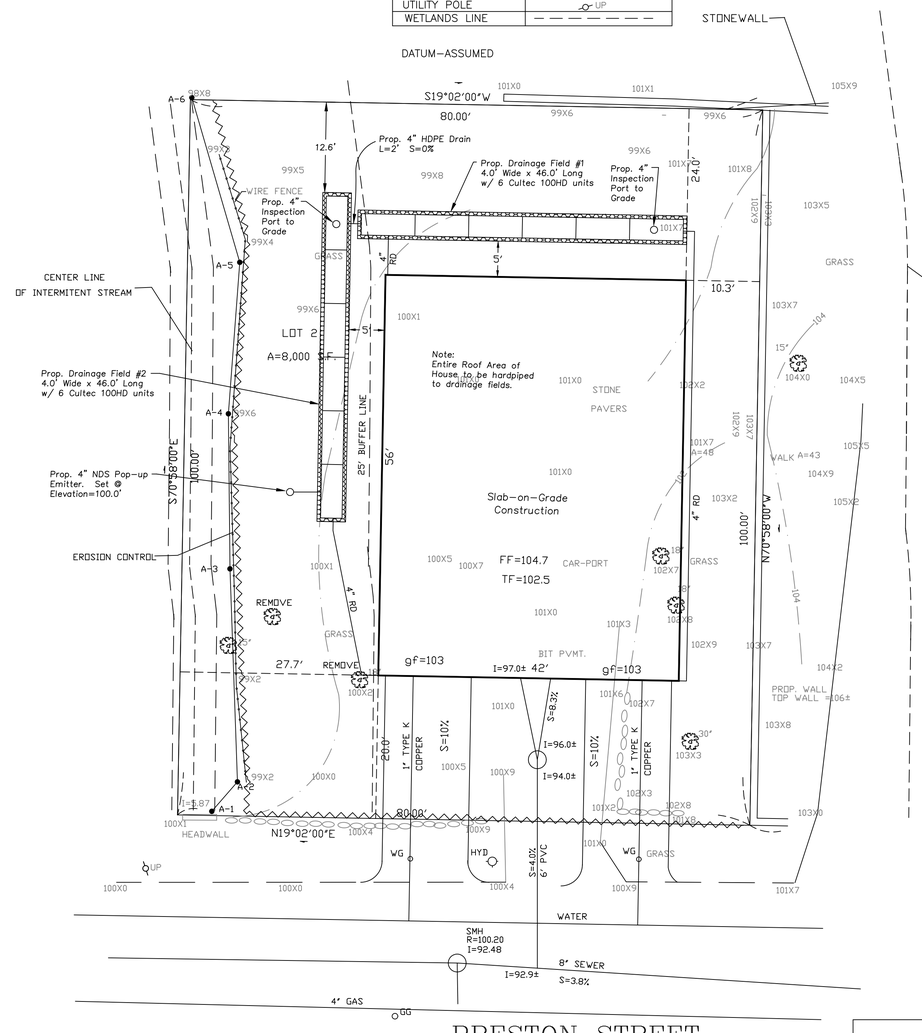


PROPOSED

DATUM–ASSUMED

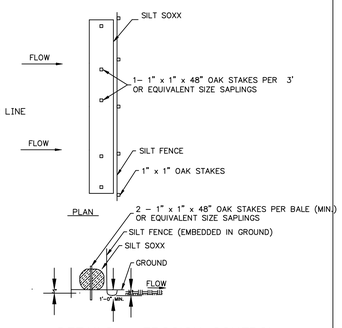


DETAILS – EROSION CONTROL

N.T.S.

## NOTES:

1) CONTRACTOR TO VERIFY LOCATION, SIZE, AND INVERT OF ALL EXISTING UTILITIES.
2) CONTRACTOR SHALL BE RESPONSIBLE TO FIND AND TIE INTO EXISTING UTILITIES.
3) CONTRACTOR TO NOTIFY DIG-SAFE PRIOR TO ANY CONSTRUCTION.
4) WATER SERVICE TO BE 1" TYPE "K" COPPER.
5) SEWER SERVICE TO BE 6" PVC 2.00% MIN. SLOPE
6) WATER & SEWER LATERALS SHALL BE 10' APART (min)
7) A NEGATIVE DETERMINATION OF APPLICABILITY WAS ISSUED BY THE WAKEFIELD CONSERVATION COMMISSION.
8) EXISTING UTILITIES HAVE BEEN CUT & CAPPED AT THE MAIN.

WETLANDS DELINEATION BY
JOHN DICK
48 HAWTHORNE STREET
SALEM, MA
978 771-5868

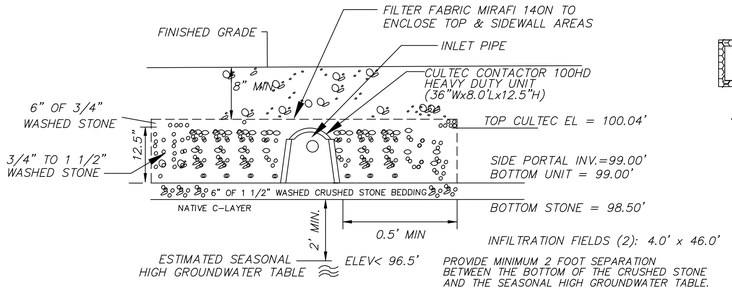


SUBSURFACE INFILTRATION SYSTEM – CROSS SECTION

(NOT TO SCALE)

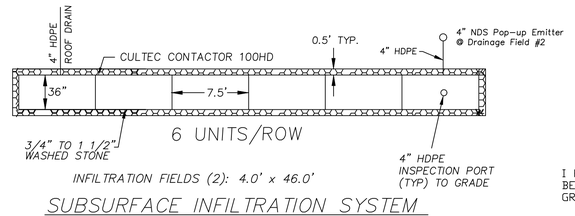


6 UNITS/ROW

INFILTRATION FIELDS (2): 4.0' x 46.0'

SUBSURFACE INFILTRATION SYSTEM

(NOT TO SCALE)

I HEREBY CERTIFY THAT THIS PLAN HAS BEEN PREPARED FROM AN ACTUAL ON THE GROUND INSTRUMENT SURVEY.

PAUL J. FINOCCHIO P.L.S. No.36115 DATE

JOHN D. SULLIVAN III P.E. NO. 41586 DATE

# PROPOSED SITE PLAN OF ASSESSORS LOT 30–164–A80 0 PRESTON STREET IN WAKEFIELD, MA

PREPARED BY: P.J.F. AND ASSOCIATES
4 HIGHLAND AVENUE
WAKEFIELD,MA 01880
(781) 883-5473

0' 5' 10' 15' 20'

SCALE: 1"= 10'

DATE: JANUARY 16, 2024 FILE No. 7887-B-3

| FIELD | PLOT | DESIGN | DRAFT | CALC. | CHECK |
|---|---|---|---|---|---|
| | | | | | |